CRANE SYSTEMS

TECHNICAL SPECIFICATION SHEET

GORBEL JIB CRANE PACKAGE

Foundationless jib · Gorbel hoist · AVLP4PRO lifter · freight and installation

A complete slab-lifting station from one order: the Gorbel free-standing jib bolts to a suitable 6 in slab with no foundation to pour, the Gorbel electric chain hoist rides on the boom, and the AVLP4PRO vacuum lifter hangs from the hook.



1 US ton	16 ft	12 ft	360°
Crane rating (2,000 lb)	Span (4,877 mm)	Overall height (3,658 mm)	Manual rotation

Next Level ships it and installs it.

KEY FEATURES

- **Gorbel free-standing jib**
  The boxed head turns on precision tapered roller bearings, full triangular gussets stiffen the base plate, and a retaining pin keeps the head seated.
- **Gorbel electric chain hoist**
  Two-speed lifting, pendant with emergency stop, upper and lower limit switches and a DC brake; a double-hole suspension plate matches the Gorbel trolley.
- **Installed by Next Level**
  Our crew drills and anchors the base, plumbs the mast, hangs the boom, hoist and lifter, and tests the crane.
- **AVLP4PRO**
  Four 520 × 320 mm pads on a 1,500 × 1,000 mm frame, 0–90° tilt: picks a slab up flat and stands it up on an A-frame.
- **Warranty**
  Gorbel jib: 10 years or 20,000 hours.

APPLICATIONS Loading and unloading a saw, CNC or polishing station; moving slabs from an A-frame to a table; adding lifting to a shop without pouring a foundation; a dedicated lifting station beside a bridge crane.

GORBEL JIB CRANE PACKAGE · TECHNICAL DATA

GORBEL FREE-STANDING JIB	
Type	Gorbel FS300 free-standing jib, foundationless base plate
Capacity	1 US ton (2,000 lb / 907 kg)
Span	16′-0″ (4,877 mm)
Overall height	12′-0″ (3,658 mm)
Height under boom (HUB)	10′-11½″ (3,340 mm)
Trolley travel	14′-1¼″ (4,299 mm)
Boom	W12 × 35 I-beam
Mast	14 in pipe (356 mm)
Rotation	360°, manual; tapered roller bearings in the head
Finish	Gorbel yellow
Shipping weight	2,039 lb (925 kg)

BASE AND SLAB	
Base plate	1¼ in thick, round, with full gussets (32 mm)
Anchors	12 × ¾ in chemical (epoxy) anchors, Grade 5 or better, 40 in bolt circle
Anchor pull-out	3,470 lb (1,574 kg) minimum each
Embedment	At least 4 in, no more than ¾ of the slab depth
Grout	1 in non-shrink grout under the plate
Slab	At least 6 in reinforced concrete, 3,000 psi; soil 2,500 psf
Clear area	12 ft × 12 ft, free of cracks, seams, expansion joints and walls

GORBEL HOIST	
Hoist	Gorbel GS electric chain hoist, 1 ton, two-speed
Control	Pendant with emergency stop; 24 V control transformer
Protection	Upper and lower limit switches; DC brake
Trolley	Push trolley on the boom, double-hole suspension plate
Standards	Tested to ASME and FEM/ISO (manufacturer)

AVLP4PRO VACUUM LIFTER	
Working load limit	2,205 lb (1,000 kg) horizontal; 1,102 lb (500 kg) vertical
Pads	4 × 520 × 320 mm on a 1,500 × 1,000 mm frame; tilt 0–90°
Air	6.36 CFM (180 L/min) at 72 psi (5 bar)
Lifter weight	229 lb (104 kg)

PACKAGE AND WARRANTY	
Freight	Included
Installation	By Next Level, included
Customer pays	Scissor-lift and forklift rentals
Jib warranty	Gorbel: 10 years or 20,000 hours (manual jibs)
Hoist warranty	Gorbel: 2 years or 4,000 hours (wear parts excluded)
Lifter warranty	Per the manufacturer

INCLUDED AS STANDARD

- Gorbel 1-ton free-standing jib: mast, head and W12 × 35 boom
- Gorbel electric chain hoist with push trolley
- AVLP4PRO vacuum lifter
- Freight to your shop
- Installation by Next Level

LAYOUT AND DIMENSIONS

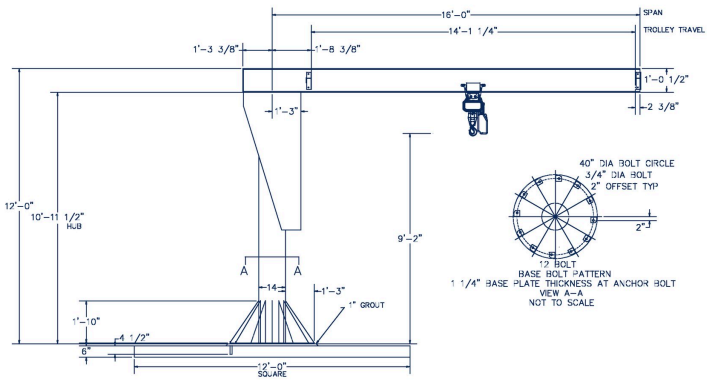

Gorbel foundationless jib, 1 ton, 16 ft span: elevation and base bolt pattern.

Gorbel layout drawing, installation manual, hoist catalog and warranty terms; product data for the AVLP4PRO. U.S. values first, metric rounded. Specifications are subject to change without notice. Images may show optional equipment. All dimensions and weights are approximate; U.S. values are converted from the factory's metric data. Document date: Nov 2026. Next Level Enterprises · www.nextlevel.plus · +1 941-900-3018 · sales@nextlevel.plus