AVLP

TECHNICAL SPECIFICATION SHEET

# AVLP4PRO

## Pneumatic four-pad vacuum lifter, 0–90° tilt

A compressed-air vacuum lifter for slab work under a jib or bridge crane.

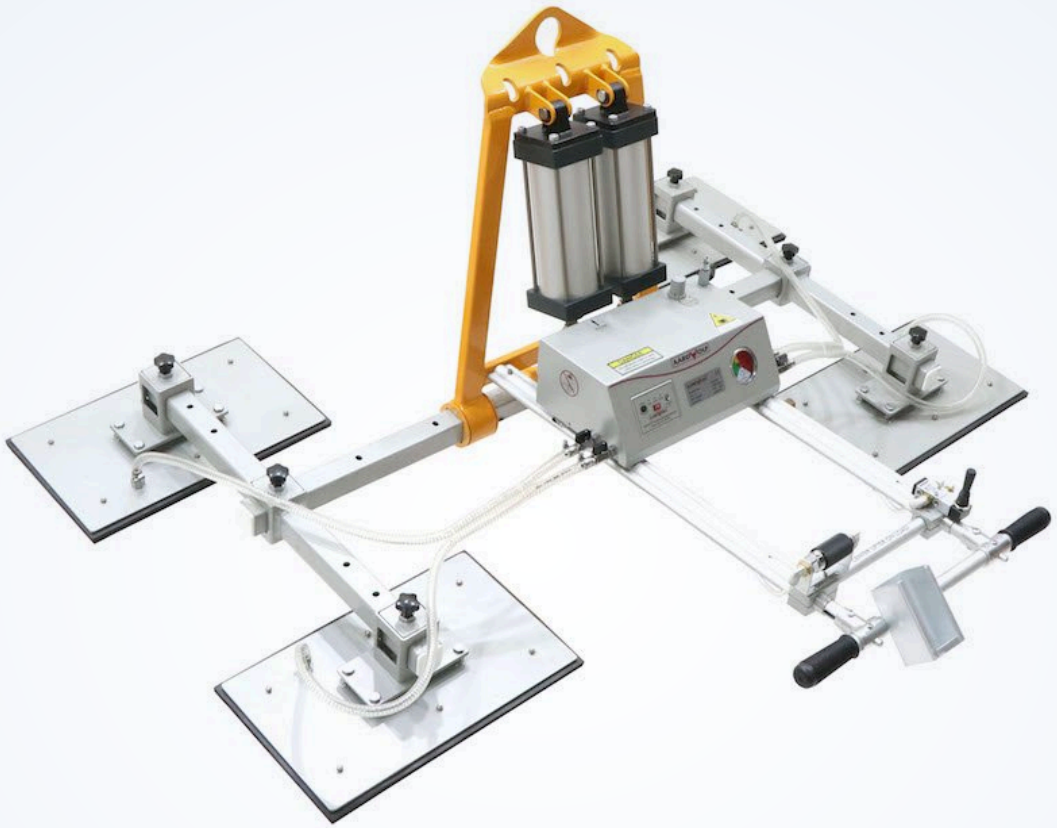

| 2,205 lb | 1,102 lb | 0–90° | 229 lb |
|---|---|---|---|
| Horizontal WLL (1,000 kg) | Vertical WLL (500 kg) | Tilt | Lifter weight (104 kg) |

Four 520 × 320 mm pads hold the slab, the frame tilts from flat to upright, and a battery-powered alarm watches the vacuum. All it needs is an air line.

**APPLICATIONS** Slab handling under a jib, workstation or bridge crane; loading saws and CNCs, flat; standing slabs up on A-frames, 0–90° tilt; shops with compressed air at the crane.

# AVLP4PRO · TECHNICAL DATA

PNEUMATIC FOUR-PAD VACUUM LIFTER, 0–90° TILT

| KEY SPECIFICATIONS | |
|---|---|
| Model | AVLP4PRO (AVLP4-P-1000) |
| WLL, horizontal | 2,205 lb (1,000 kg) |
| WLL, vertical | 1,102 lb (500 kg) |
| Pads | 4 × 20½ × 12⅝ in (520 × 320 mm) |

| KEY SPECIFICATIONS (CONT.) | |
|---|---|
| Tilt | 0–90° |
| Weight | 229 lb (104 kg) |
| Air | 6.36 CFM (180 L/min) at 72 psi (5 bar) |
| Alarm | 12 V battery alarm |

## INCLUDED AS STANDARD

- AVLP4PRO lifter with four 520 × 320 mm pads
- 0–90° tilting frame
- Pneumatic vacuum system with gauge
- 12 V alarm battery and charger
- Manufacturer documentation and load chart

## LAYOUT AND DIMENSIONS

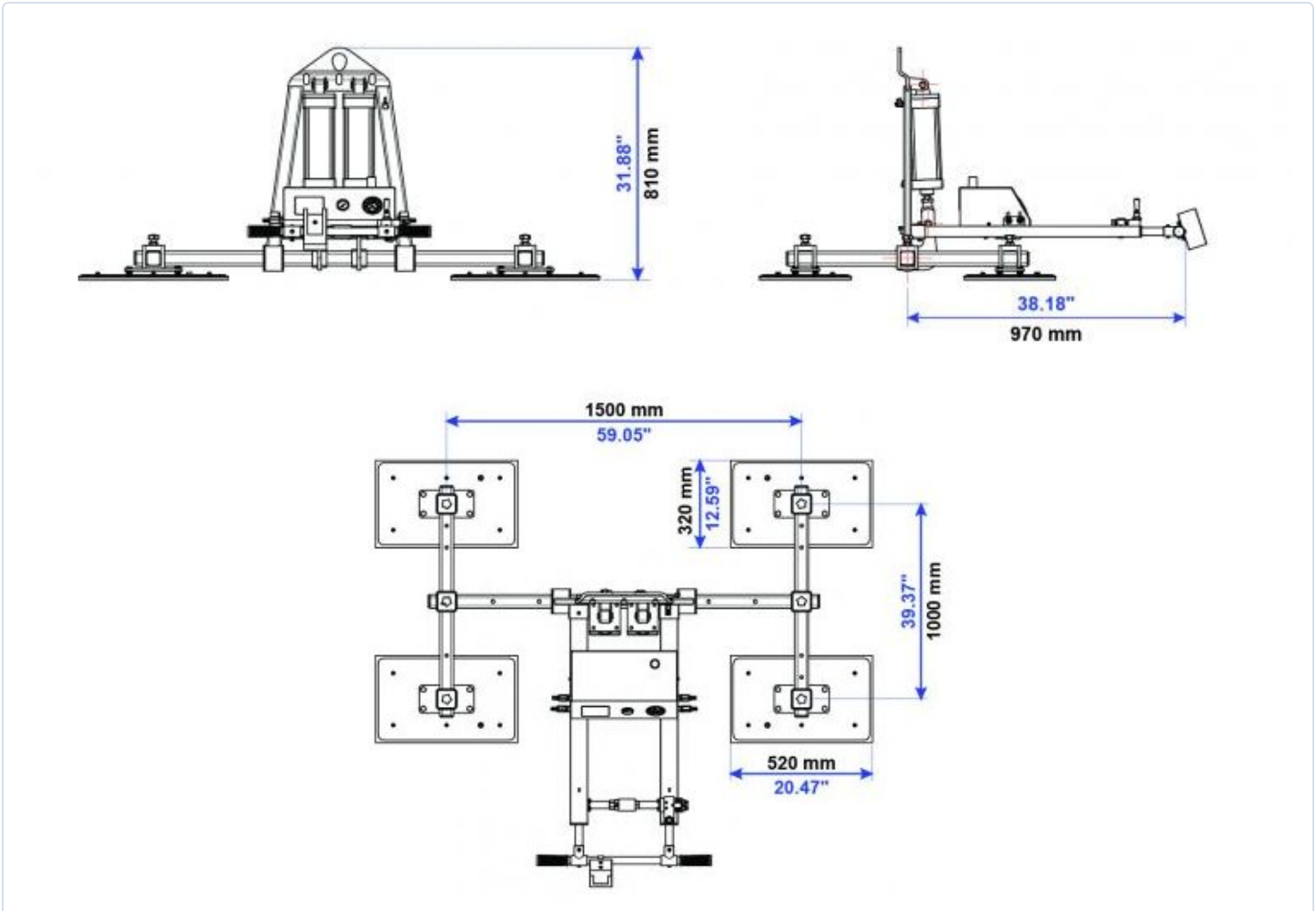


Manufacturer drawing: front, side and plan views.

Manufacturer data and dimension drawing. Specifications are subject to change without notice. Images may show optional equipment. All dimensions and weights are approximate; U.S. values are converted from the factory's metric data. Document date: Nov 2026. Next Level Enterprises · www.nextlevel.plus · +1 941-900-3018 · sales@nextlevel.plus