

SKYREACH 600

Self-propelled electric vacuum lifting robot

PRODUCT OVERVIEW

A battery-electric vacuum lifter that drives itself to the slab, picks it up on six sponge pads and places it: the boom lifts, telescopes and shifts sideways, and the pad frame turns 360° and tilts, all from a wireless remote. At 810 mm (31.9 in) wide it is built for indoor installations.

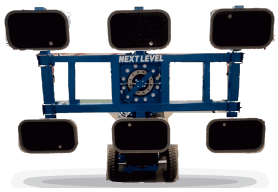

Six sponge pads



Controls, remote holder

1,323 lb	**12 ft 1¾ in**	**31.9 in**	**24 V lithium**
Capacity, retracted (600 kg)	Lifting height (3,700 mm)	Chassis width (810 mm)	Battery, 4–6 h charge

KEY SPECIFICATIONS

Fully extended	661 lb (300 kg)
Suction pads	6 sponge, 400 × 250 mm
Vacuum	2 pumps, 2 independent circuits
Control	Wireless remote
Rotation / tilt	360° / 90° left-right, electric
Side shift	100 mm (3.9 in), automatic
Tires	Solid, smooth floors
Warranty	One year, Next Level written terms

CAPACITY CHANGES WITH REACH

1,323 lb (600 kg) is the rating with the boom retracted; fully extended it is 661 lb (300 kg). The load chart on the machine governs every lift.

IDEAL APPLICATIONS

- Slab handling and countertop installation: granite, quartz, quartzite and marble with a sealed surface.
- Indoor work on smooth floors, through standard doorways.
- Glass and other smooth, non-porous panels.

INCLUDED CONFIGURATION

- Six sponge suction pads on the electric rotating and tilting pad frame.
- Two vacuum pumps, two independent circuits, gauges and alarm.
- Wireless remote with variable speed.
- 24 V lithium battery and U.S. 110 V charger.
- 28 removable counterweight plates.
- Load chart, operator manual and one-year warranty.

BEFORE YOU ORDER

Measure the narrowest door and any elevator on the route: the chassis is 810 mm (31.9 in) wide and the counterweights come off for elevators. Check that the slab surface seals on sponge pads.

POWERED POSITIONING.

Drive it, lift it, turn it and set it down, from one wireless remote.



Wireless remote control

Two joysticks run the boom, the side shift and the pad frame; switches control the vacuum and the emergency stop sits in the middle. Boom extension, lifting and side shift are variable speed, so a heavy slab can be eased into place.

TWO PUMPS, TWO CIRCUITS

Each vacuum circuit has its own pump and check valves, with a gauge and an alarm buzzer if the vacuum drops. The factory states the vacuum system keeps holding the load if electrical power is interrupted.





Vacuum pumps.

24 V DC pumps start automatically when the vacuum falls and stop when it is restored.

Electric rotation and tilt.

The pad frame turns 360° and tilts 90° left or right under power, and moves 180° from flat to vertical.

Lithium power

24 V, 250 Ah lithium battery: 4–6 hours to charge from a U.S. 110 V outlet; a full working day, or 2–3 days at lighter use.

Counterweights come off

28 plates of 20 kg (44.1 lb) lift out for transport in an elevator; the machine is about 950 kg (2,094 lb) without them.

TECHNICAL SPECIFICATIONS

SkyReach 600 · technical data

CAPACITY AND REACH

Rated capacity, boom retracted	1,323 lb (600 kg)
Load-chart stages	600 / 540 / 455 / 350 / 300 kg (1,323 / 1,190 / 1,003 / 772 / 661 lb)
Max. lifting height	12 ft 1¾ in (3,700 mm), ground to the center of the suction frame

VACUUM SYSTEM

Suction pads	6 sponge pads, 15.7 × 9.8 in (400 × 250 mm) each
Vacuum pumps	2, one per circuit
Circuits	2 independent circuits with check valves
Monitoring	Vacuum gauges with alarm buzzer

MOVEMENTS

Pad frame, vertical	180°, automatic
Boom in / out	Telescopic, automatic
Arm up / down	Powered, automatic
Pad-frame tilt	Left / right 90°, electric
Pad-frame rotation	360°, electric

CONTROL

Remote	Wireless remote control
Variable speed	Boom extension / retraction, lifting / lowering and side shift

CONTROL (CONT.)

Fixed speed	Driving, pad-frame rotation and tilt

DRIVE AND POWER

Drive	Self-propelled, rear drive wheel with electromagnetic brake
Drive motor	24 V / 1,500 W (2.0 hp)
Lifting motor	24 V / 2,200 W (3.0 hp), 12 L hydraulic unit
Tires	Solid, for smooth floors
Outriggers	PU outriggers on both sides
Battery	24 V lithium, 250 Ah, 120 A BMS; 121 lb (55 kg)
Charger	24 V / 50 A; U.S. 110 V / 60 Hz single phase, U.S. plug
Charging time	4–6 hours
Runtime	One working day, or 2–3 days at lighter use (factory)

SERVICE

Spare parts	Stocked by Next Level in the U.S.

Factory data for the Next Level configuration, Aug–Sep 2026. Capacity falls as the boom extends; the load chart on the machine governs. Runtime depends on use. U.S. values first, metric in brackets. Specifications are subject to change without notice.

SIZE IT UP.

The delivered Next Level SkyReach 600 and its factory load chart.



Front: pad frame with six sponge pads; chassis width at the wheels.

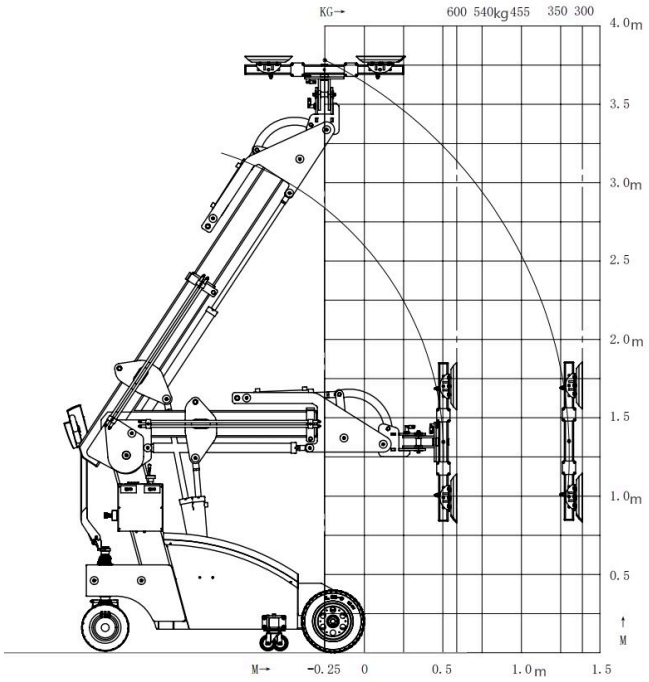

Factory load chart (kg, m): capacity falls as the boom reaches out.

MACHINE

Chassis width	31.9 in (810 mm)
Overall length	8 ft 4.8 in (2,560 mm)
Max. lifting height	12 ft 1¾ in (3,700 mm)
Machine weight, no counterweights	≈ 2,094 lb (≈ 950 kg)

COUNTERWEIGHTS AND SHIPPING

Counterweights	28 removable plates, 44.1 lb (20 kg) each; 1,235 lb (560 kg) total
Wooden crate	101.6 × 40.6 × 65.7 in (2,580 × 1,030 × 1,670 mm)
Crate gross weight	3,594 lb (1,630 kg)

PLAN THE ROUTE.

Doors, elevators and the daily checks.

TRANSPORT AND ELEVATORS

- Lift the 28 counterweight plates out to cut about 560 kg (1,235 lb) for an elevator; check the elevator's rated load and cab size.
- Re-install every plate before the first lift.
- Tilt the pad frame to the side to narrow the machine for doorways.

EVERY SHIFT (OPERATOR MANUAL)

- Battery above 25 % before work; charge when the gauge asks.
- Vacuum test: lift one pad edge; the pump must restart and the gauge must recover.
- Run every function without a load; keep people clear of the working area.
- Clean, dry slab surface: the cleaner the surface, the better the seal.

Photos: the Next Level SkyReach 600 at the factory, Sep 2026. Counterweights are removed only for transport; never lift without them. Extra counterweight plates are not allowed. Budgetary equipment information. U.S. and metric values appear together; added conversions are approximate. This sales document does not replace the delivered manual, drawings or safety labels.