

GORBEL JIB CRANE PACKAGE

Foundationless jib · Gorbel hoist · AVLP4PRO lifter · freight and installation

PRODUCT OVERVIEW

A complete slab-lifting station from one order: the Gorbel free-standing jib bolts to a suitable 6 in slab with no foundation to pour, the Gorbel electric chain hoist rides on the boom, and the Aardwolf AVLP4PRO vacuum lifter hangs from the hook. Next Level ships it and installs it.



AVLP4PRO, 0–90° tilt



Four pads, 1,500 × 1,000 mm

1 US ton	16 ft	12 ft	360°
Crane rating (2,000 lb)	Span (4,877 mm)	Overall height (3,658 mm)	Manual rotation

KEY SPECIFICATIONS

Crane	Gorbel FS300 free-standing jib
Mounting	Foundationless, 12 chemical anchors
Height under boom	10′-11½″
Hoist	Gorbel electric chain hoist, two-speed
Lifter	Aardwolf AVLP4PRO
Jib warranty	Gorbel 10 years / 20,000 h
Delivery	Freight and installation included

THE RATING INCLUDES THE LIFTER

The 2,000 lb crane rating covers everything below the hook. With the 229 lb AVLP4PRO and rigging on the hook, the slab must stay under 2,000 lb minus their weight, and inside the lifter's own load chart.

IDEAL APPLICATIONS

- Loading and unloading a saw, CNC or polishing station.
- Moving slabs from an A-frame to a table.
- Adding lifting to a shop without pouring a foundation.
- A dedicated lifting station beside a bridge crane.

INCLUDED CONFIGURATION

- Gorbel 1-ton free-standing jib: mast, head and W12 × 35 boom.
- Gorbel electric chain hoist with push trolley.
- Aardwolf AVLP4PRO vacuum lifter.
- Freight to your shop.
- Installation by Next Level.

BEFORE YOU ORDER

Check the slab: at least 6 in reinforced, 3,000 psi, with a 12 × 12 ft area free of cracks, seams, joints and walls. Keep a 16 ft swing clear, and bring 72 psi air for the lifter and power for the hoist.

NO FOUNDATION TO POUR.

A Gorbel jib on your existing slab, with the hoist and the lifter ready to work.

FOUNDATIONLESS, ON THE RIGHT SLAB

The round base plate sits on 1 in of non-shrink grout and twelve ¾ in chemical anchors on a 40 in bolt circle, each good for at least 3,470 lb of pull-out, in a reinforced slab at least 6 in thick.



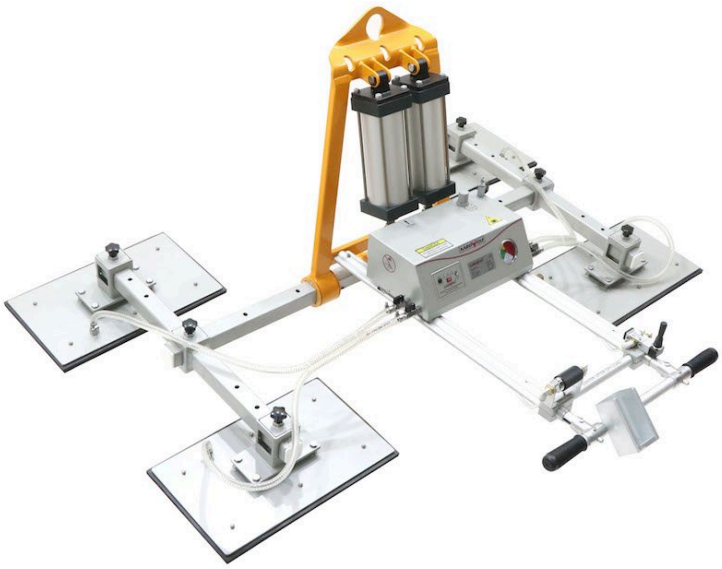

Gorbel free-standing jib.

The boxed head turns on precision tapered roller bearings, full triangular gussets stiffen the base plate, and a retaining pin keeps the head seated. Gorbel designs its jibs with an allowance for the hoist, trolley and impact, so the full 1-ton rating is usable at the hook.

Aardwolf AVLP4PRO.

Four 520 × 320 mm pads on a 1,500 × 1,000 mm frame, 0–90° tilt: picks a slab up flat and stands it up on an A-frame. Runs on 72 psi shop air.

Gorbel electric chain hoist

Two-speed lifting, pendant with emergency stop, upper and lower limit switches and a DC brake; a double-hole suspension plate matches the Gorbel trolley.

Installed by Next Level

Our crew drills and anchors the base, plumbs the mast, hangs the boom, hoist and lifter, and tests the crane.

Warranty

Gorbel jib: 10 years or 20,000 hours. Gorbel hoist: 2 years or 4,000 hours. AVLP4PRO: per the manufacturer.

Photos: Gorbel free-standing jib cranes in stone shops (Gorbel yellow), background removed.

TECHNICAL SPECIFICATIONS

Gorbel Jib Crane Package · technical data

GORBEL FREE-STANDING JIB

Type	Gorbel FS300 free-standing jib, foundationless base plate
Capacity	1 US ton (2,000 lb / 907 kg)
Span	16′-0″ (4,877 mm)
Overall height	12′-0″ (3,658 mm)
Height under boom (HUB)	10′-11½″ (3,340 mm)
Trolley travel	14′-1¼″ (4,299 mm)
Boom	W12 × 35 I-beam
Mast	14 in pipe (356 mm)
Rotation	360°, manual; tapered roller bearings in the head
Finish	Gorbel yellow
Shipping weight	2,039 lb (925 kg)

BASE AND SLAB

Base plate	1¼ in thick, round, with full gussets (32 mm)
Anchors	12 × ¾ in chemical (epoxy) anchors, Grade 5 or better, 40 in bolt circle
Anchor pull-out	3,470 lb (1,574 kg) minimum each
Embedment	At least 4 in, no more than ¾ of the slab depth
Grout	1 in non-shrink grout under the plate
Slab	At least 6 in reinforced concrete, 3,000 psi; soil 2,500 psf
Clear area	12 ft × 12 ft, free of cracks, seams, expansion joints and walls

GORBEL HOIST

Hoist	Gorbel GS electric chain hoist, 1 ton, two-speed
Control	Pendant with emergency stop; 24 V control transformer
Protection	Upper and lower limit switches; DC brake
Trolley	Push trolley on the boom, double-hole suspension plate
Standards	Tested to ASME and FEM/ISO (manufacturer)

AARDWOLF AVLP4PRO VACUUM LIFTER

Working load limit	2,205 lb (1,000 kg) horizontal; 1,102 lb (500 kg) vertical
Pads	4 × 520 × 320 mm on a 1,500 × 1,000 mm frame; tilt 0–90°
Air	6.36 CFM (180 L/min) at 72 psi (5 bar)
Lifter weight	229 lb (104 kg)

PACKAGE AND WARRANTY

Freight	Included
Installation	By Next Level, included
Customer pays	Scissor-lift and forklift rentals
Jib warranty	Gorbel: 10 years or 20,000 hours (manual jibs)
Hoist warranty	Gorbel: 2 years or 4,000 hours (wear parts excluded)
Lifter warranty	Per the manufacturer

Gorbel layout drawing, installation manual, hoist catalog and warranty terms; Aardwolf product data for the AVLP4PRO. U.S. values first, metric rounded. Specifications are subject to change without notice.

LAYOUT AND DIMENSIONS.

Gorbel foundationless jib, 1 ton, 16 ft span: elevation and base bolt pattern.

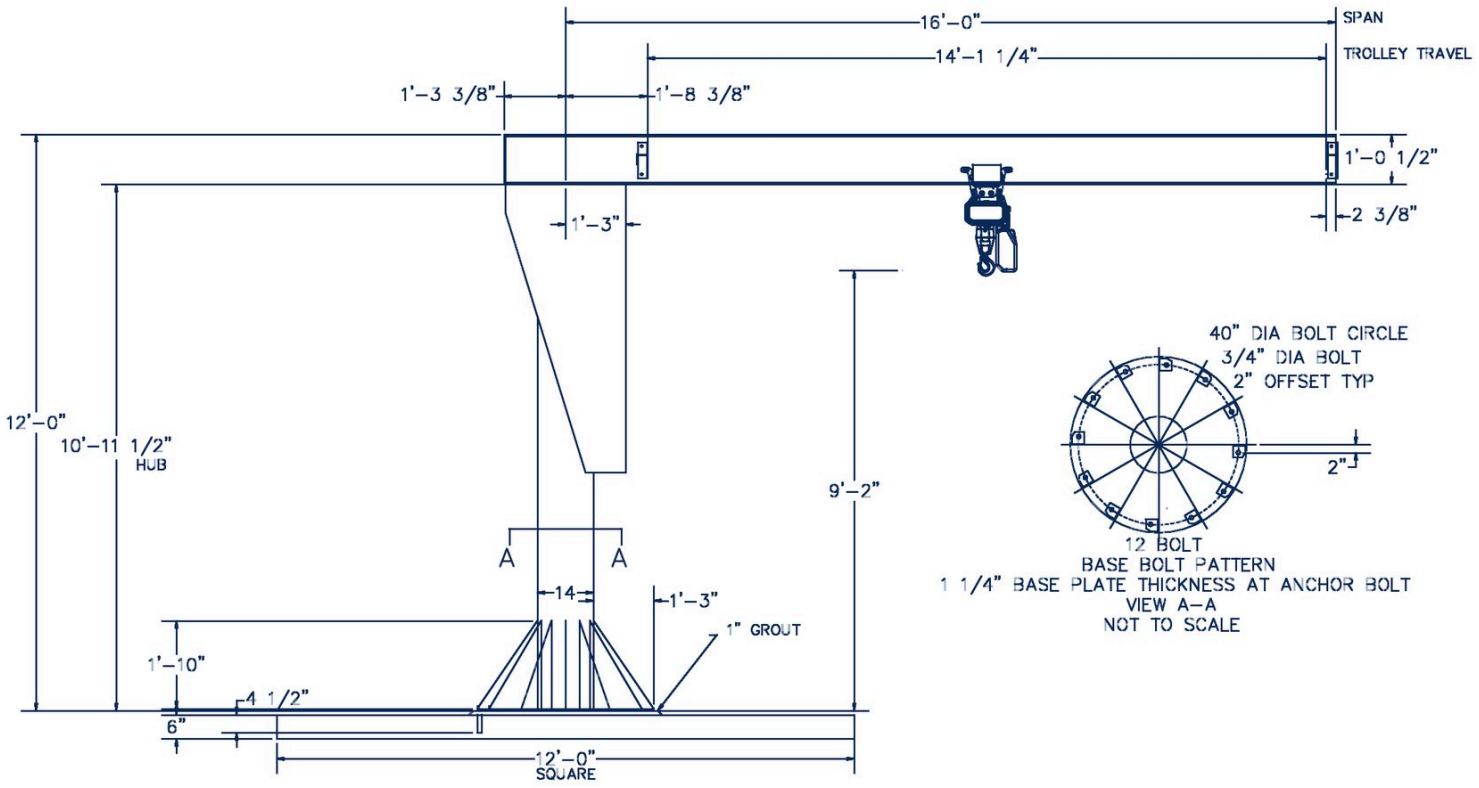

CRANE

Span / trolley travel	16′-0″ / 14′-1¼″
Overall height / HUB	12′-0″ / 10′-11½″
Swing	360°, manual; keep a 16 ft radius clear

SLAB AND ANCHORS

Slab	≥ 6 in reinforced, 3,000 psi; 12′ × 12′ clear area
Anchors	12 × ¾ in chemical, 40 in bolt circle
Pull-out	≥ 3,470 lb per anchor; embed ≥ 4 in

Questions, or ready for a written quotation? **+1 941-900-3018** · **sales@nextlevel.plus** · **nextlevel.plus**

Gorbel layout drawing (do not scale). Site: the slab and anchors must suit the crane loads; the customer pays scissor-lift and forklift rentals during installation.