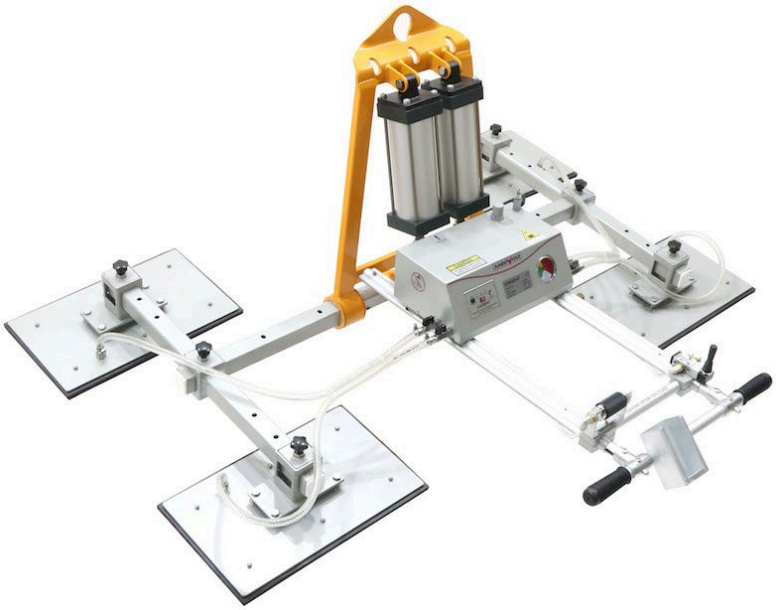

AARDWOLF AVLP4PRO

Pneumatic four-pad vacuum lifter, 0–90° tilt

PRODUCT OVERVIEW

A compressed-air vacuum lifter for slab work under a jib or bridge crane. Four 520 × 320 mm pads hold the slab, the frame tilts from flat to upright, and a battery-powered alarm watches the vacuum. All it needs is an air line.



Four pads, 1,500 × 1,000 mm



Tilts 0–90°

2,205 lb	1,102 lb	0–90°	229 lb
Horizontal WLL (1,000 kg)	Vertical WLL (500 kg)	Tilt	Lifter weight (104 kg)

KEY SPECIFICATIONS

Model	AVLP4PRO (AVLP4-P-1000)
WLL, horizontal	2,205 lb (1,000 kg)
WLL, vertical	1,102 lb (500 kg)
Pads	4 × 20½ × 12⅝ in (520 × 320 mm)
Tilt	0–90°
Weight	229 lb (104 kg)
Air	6.36 CFM (180 L/min) at 72 psi (5 bar)
Alarm	12 V battery alarm

CHECK THE CRANE, TOO

The lifter's weight and the slab together must stay within the crane's rating, and every lift inside the lifter's orientation-specific load chart.

IDEAL APPLICATIONS

- Slab handling under a jib, workstation or bridge crane.
- Loading saws and CNCs, flat.
- Standing slabs up on A-frames, 0–90° tilt.
- Shops with compressed air at the crane.

INCLUDED CONFIGURATION

- AVLP4PRO lifter with four 520 × 320 mm pads.
- 0–90° tilting frame.
- Pneumatic vacuum system with gauge.
- 12 V alarm battery and charger.
- Manufacturer documentation and load chart.

BEFORE YOU ORDER

Confirm your crane's rating covers the lifter plus the heaviest slab, bring 72 psi air to the hook and confirm the U.S. charger.

DIMENSIONS.

Manufacturer drawing: front, side and plan views.

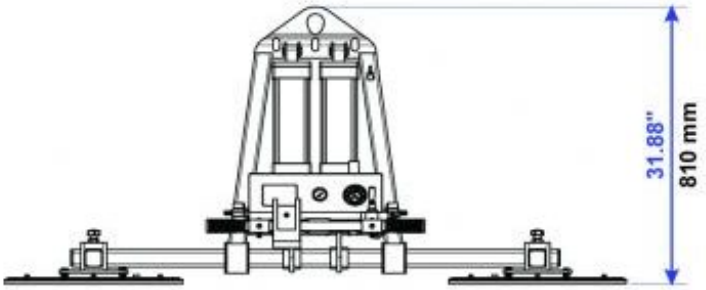

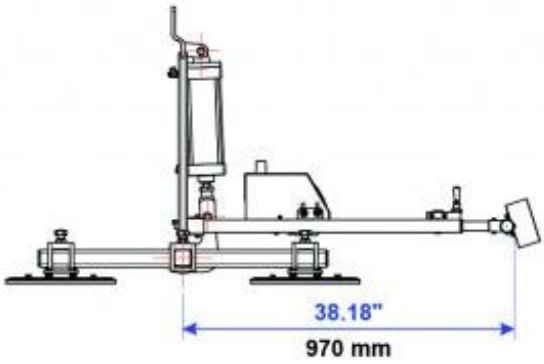

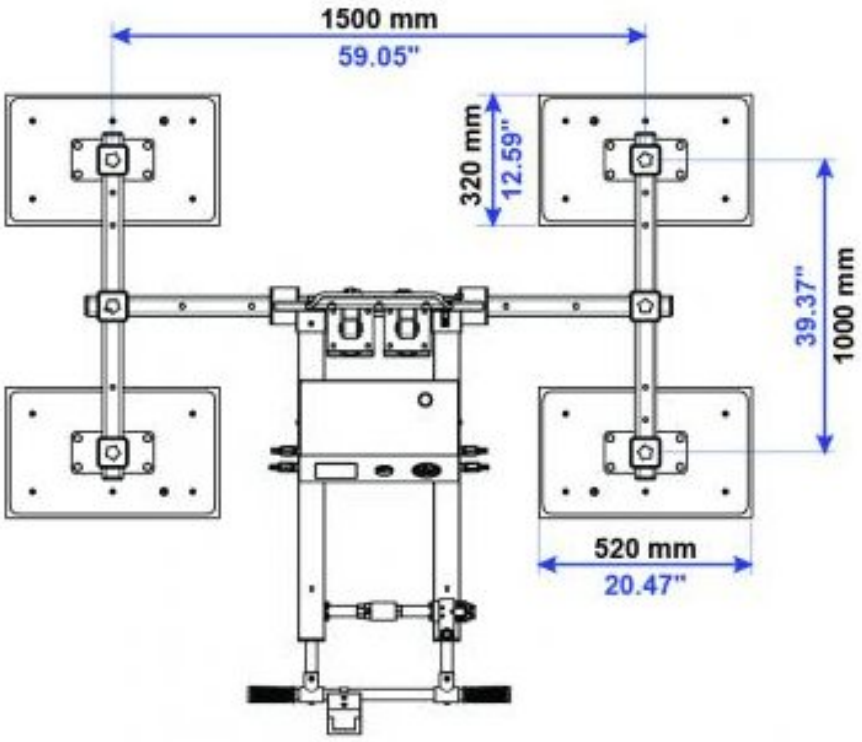

LIFTING

Pad layout (centers)	59 × 39⅜ in (1,500 × 1,000 mm)

SIZE, AIR AND POWER

Height	31.88 in (810 mm)
Depth (side view)	38.18 in (970 mm)
Air consumption	6.36 CFM (180 L/min)
Supply pressure	72 psi (5 bar)
Alarm battery	12 V, 4.0 Ah; full charge in 0.5 h
Charger	220–240 V AC input; confirm the U.S. charger with your order

Questions, or ready for a written quotation? **+1 941-900-3018** · **sales@nextlevel.plus** · **nextlevel.plus**

Aardwolf AVLP4PRO. Use the manufacturer's load chart for every lift.